WARRANTY

Within 30 days of purchase: Return to retailer from which you purchased for repair or replacement.

Within 5 years of purchase: Return to Olight for repair or replacement.

This warranty does not cover normal wear and tear, modifications, misuse, disintegrations, negligence, accidents, improper maintenance, or repair by anyone other than an Authorized retailer or Olight itself.

Technical Support Inquiries
techsupport@olightworld.com
Customer Service
cs@olightworld.com
Visit **www.olightworld.com** to see our complete product line of portable illumination tools.

Olight Technology Co., Limited
2/F East, Building A, B3 Block, Fuhai Industrial Park, Fuyong, Bao'an District, Shenzhen , China 518103

V1. AUG 4, 2015

Made in China

SR52UT INTIMIDATOR

EXTENDED-RANGE RECHARGEABLE LED FLASHLIGHT

USER MANUAL

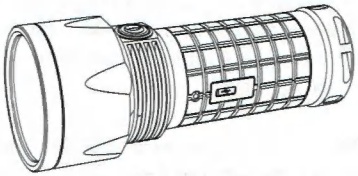

Thank you for purchasing the Olight SR52UT Intimidator flashlight! Please read this manual carefully before using this product.

INSIDE THE BOX

SR52UT Intimidator, Micro-USB cable, manual, holster, USB vehicle power adapter, 3X18650(optional)

BATTERY INSTALLATION

Ensure batteries are inserted with the positive (+) end pointing to the head.

SUPPORTED BATTERIES

- 3 x 18650 (Please ensure that all the 18650 batteries used in the SR52UT have a button top configuration or they will not make contact with terminals in the battery compartment.)

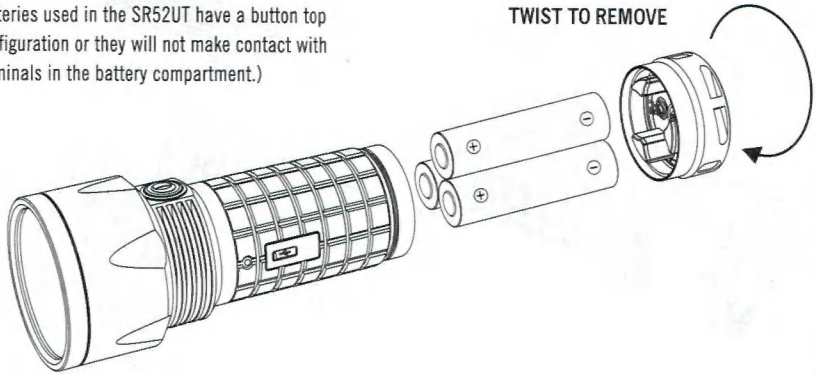

WARNING:

- Do not use unsupported batteries with this flashlight.
- Cannot use flat 18650 batteries.
- Do not mix rechargeable and non-rechargeable batteries.
- Use caution on high outputs or long runtimes as flashlight may get hot.
- Do not charge the light when use the non-rechargeable batteries.
- Do not mix batteries of different types/brands.
- Do not use the batteries without protective boards

HOW TO OPERATE

ON/OFF: Click the side switch to turn ON/OFF the flashlight. The brightness level will return to last output level (except strobe mode) when the flashlight is turned on.

CHANGE BRIGHTNESS LEVEL (FIG A)

With the light already on, press and hold the side switch to cycle through the brightness level from low – medium – high until the desired brightness level selected by releasing the side switch.

STROBE (FIG A) Double-click the side switch will activate the strobe mode. Hold down the side switch for 1 second to quit strobe mode, the flashlight will return to memorized output level.

LOCKING: (FIG B) When the light is off, press and hold the side switch, the light will be turned on temporarily two seconds then shut off automatically. That indicates the side switch operation has been disabled already for preventing accidental operation.

UNLOCKING: (FIG B) With the light off, press and hold the side switch approximately one second to enable the side switch operation.

CHARGING THE FLASHLIGHT(FIG C)

Push the cover above the USB socket aside, plug in the Micro-USB cable into the Micro-USB charging port on the body of the flashlight. Connect the Micro-USB cable with a USB power supply or computer USB port or a vehicle charging adapter to charge. The LED indicator will light up in red to show the charging is in processing. Fully charging three depleted 18650 batteries will take more than 10 hours. When the flashlight is fully charged the LED indicator will turn green.

LOW BATTERY WARNING

When the battery power is low, the power indicator will start to blink for one minute; If the indicator turns red, the flashlight will shut off at any time.

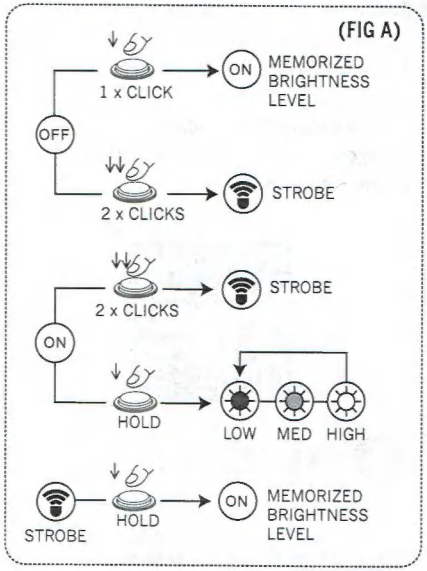

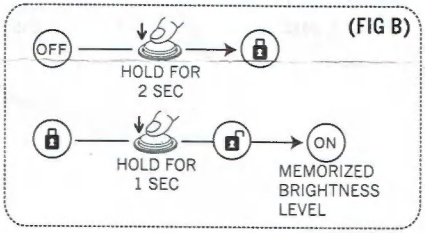

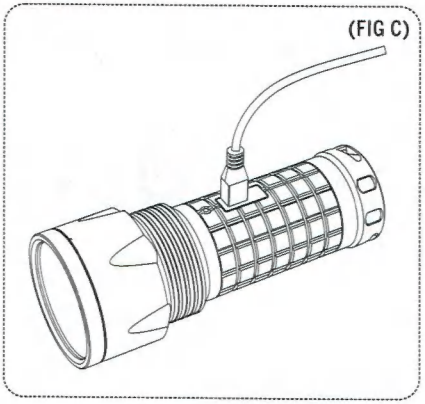

SPECIFICATIONS

LIGHT OUTPUT AND RUNTIME	1,100 lumens / 4 hrs 550 lumens / 7.5 hrs 80 lumens / 40 hrs
STROBE	10Hz
LED	CREE XP-L HI CW
VOLTAGE	3V to 9V
CANDELA	160,000 cd
BEAM DISTANCE	800 m/ 2,625 ft
BATTERY TYPE	3 x 18650
BODY TYPE	Type III hard anodized aluminum
WATERPROOF	IPX8 (up to 2 m)
IMPACT RESISTANCE	1 m
DIMENSIONS	L 161.5mm x D 63mm/ 6.3 in x 2.5in
WEIGHT	405 g / 14.3 oz (excluding batteries)

Note: testing done with 3 x 18650 batteries (3.6V, 3400mAh)
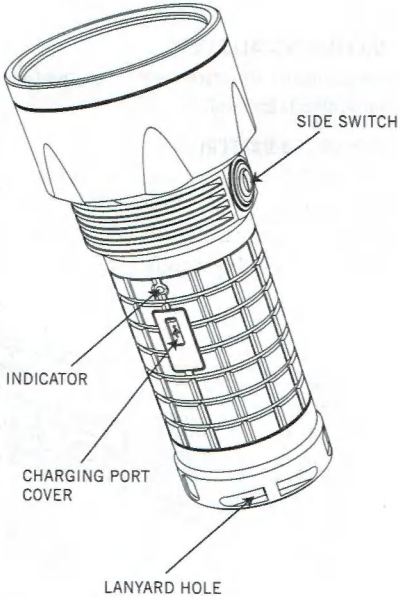
All performance claims to ANSI/NEMA FL1-2009 Standard.